ISOMAG

The friendly magmeter

DATA SHEET

MS2500

CE

ICIM CERTIFIED PRODUCT WATER CONTACT MATERIALS

NSF Certified to NSF/ANSI/CAN 61

WRAS APPROVED MATERIAL

ISOIL INDUSTRIA

INDEX

TECHNICAL DATA	2
2014/68/UE PED DIRECTIVE	3
OVERALL DIMENSIONS	4
MS 2500 PN 10/64 - ANSI 150/300 OVERALL DIMENSIONS	5
SEPARATE VERSION	8
INSTALLATION RECOMMENDATIONS	9
RECOMMENDED INSTALLATION PROCEDURE	10
SENSOR GROUNDING	11
PRESSURE LOSS CALCULATION (CONES 8° ANGLES)	12
OIML R49: MV110/ MV110W/ MV145	13
MI-001: MV110 / MV110W/ MV145/ MV255	16
MI-001: MV800	18
MI-004: MV110 / MV110W / MV800	20
HOW TO ORDER	22

The manufacturer guarantees only English text available on our web site www.isoil.com

TECHNICAL DATA

OVERALL FEATURES	
Nominal diameter	❑ DN 25 ÷ 2000
Minimum conductivity	❑ 5 µS/cm
Humidity Range	❑ 0÷100% (IP 67)
Accuracy	❑ See relevant converter data sheet
CE Certification	❑ Yes
PED	❑ Yes

STANDARD FEATURES	
Body material	❑ Carbon steel painted
Nominal pressure	❑ 1600 kPa (4000 kPa up to DN 50)
Process connection	❑ Flanges std : UNI PN 16
Version – protection rating	❑ Compact IP67 (IP68 on request)
Flanges material	❑ Carbon steel
Lining material	❑ Polipropilene (max. PN 16) ❑ Ebonite ❑ PTFE (max PN 40) ❑ Rilsan (max. PN 16)
Gasket material (ONLY for lining in Polypropylene)	❑ FPM
Liquid temperature	❑ 0°C ÷ 70°C with Rilsan lining ❑ 0°C ÷ 60°C with PP lining ❑ -5°C ÷ 80°C with ebonite lining ❑ -20°C ÷130° (100°C with PTFE lining in compact version)
Vacuum resistance	❑ 20 Kpa (absolute) at 100 °C (60/80°C for PP/Ebonite)
Electrodes material	❑ Acciaio inox AISI 316L ❑ Hastelloy C276 ❑ Platinum ❑ Titanium ❑ Tantalum
Materials Certifications	❑ WRAS, NSF, DM174
Flow profile sensitivity class	❑ U0D0 according to ISO 4064 - OIMLR49 - MID

OPTIONAL FEATURES (CHECK FOR MORE DETAILS 'HOW TO ORDER' ON LAST PAGE)	
Body material	❑ Stainless steel AISI 304 or 316
Gaskets material (ONLY for lining in Polypropylene)	❑ EPDM
Nominal pressure	❑ Higher pressure rates available on request
Process connection	❑ Flanges: UNI, ANSI, DIN, JIS Others on request
Flanges material	❑ Stainless steel AISI 304 - AISI316L
Liquid temperature	❑ -20°C ÷ 180°C* with PTFE lining in separate version: * sensors with working temperature higher than 110 ° C are classified according to PED guidelines (details on table in the next page).
Lining material	❑ On request
Electrodes material	❑ On request
Version – protection rating	❑ Separate version (max 20m) – IP 68 ❑ Separate version (max 500 m), with preamplifier – IP 67 ❑ Separate version (max 500 m), with preamplifier – IP 68
MID Certifications	❑ MI-001 (check table below) ❑ MI-004 (check table below)

The manufacturer guarantees only English text available on our web site www.isoil.com

2014/68/UE PED DIRECTIVE

Here below the tables of wproducts subject to Directive 2014/68/UE for MS2500
The tables show which category of PED is applicable according to the water operating temperature (TAB A T <110 ° C TAB B T> = 110 ° C), sensor's DN and its nominal pressure.

DN / PN CORRELATION TABLE AND PED DIRECTIVE

ONLY FOR FAMILY MS2500-MS1000 AND PN MAX 40 Bar
ONLY FOR METER WITH LINING IN PTFE
FOR METER FAMILY MS2500 TYPE FLANGE ONLY UNI EN1092 - P245GH OR ASTM A105

ONLY FOR METER FOR WATER WITH T. > 110°C

DN	PN - Nominal Pressure			
	B	C	D	E
25	USE PN 40		USE PN 40	40
32				40
40				40
50	USE PN 16	16		40
65		16		40
80		16		40
100		16		40
125		16		40
150		16		40
200	10	16	25	40
250	10	16	25	40
300	10	16	25	40
350	10	16	25	40
400	10	16	25	40
450	10	16	25	40
500	10	16	25	40

CONDITIONS TO SATISFY FOR T.> 110 ° C:
VAPOR PRESSURE p> 1.5 ATA

CATI I
32>DN<=DN100+ PS*DN> 1000<=3500
CAT II
100>DN<=250 + PS*DN>3500<=5000
CATI III
DN> 250 + PS*DN>5000

MEANING OF TABLES CODE

=	OUT OF PED
=	CAT. I
=	CAT. II
=	CAT. III
=	USE DIFF. PN

DN / PN CORRELATION TABLE AND PED DIRECTIVE

ONLY FOR METER FOR WATER WITH T.< 110°C

DN	PN - Nominal Pressure			
	B	C	D	E
25	USE PN 40		USE PN 40	40
32				40
40				40
50	USE PN 16			40
65				40
80				40
100				40
125				40
150				40
200	10		25	40
250	10	16	25	40
300	10	16	25	40
350	10	16	25	40
400	10	16	25	40
450	10	16	25	40
500	10	16	25	40
600	10	16	25	40
700	10	16	25	40
800	10	16	25	40
1000	10	16	25	40
1200	10	16	25	40
1300	10	16	25	40
1400	10	16	25	40
1500	10	16	25	40
1600	10	16	25	40
1700	10	16	25	40
1800	10	16	25	40
2000	10	16	25	40
2400	10	16	25	40

For each product is released a declaration of conformity, identified by the instrument's serial number

The manufacturer guarantees only English text available on our web site www.isoil.com

OVERALL DIMENSIONS

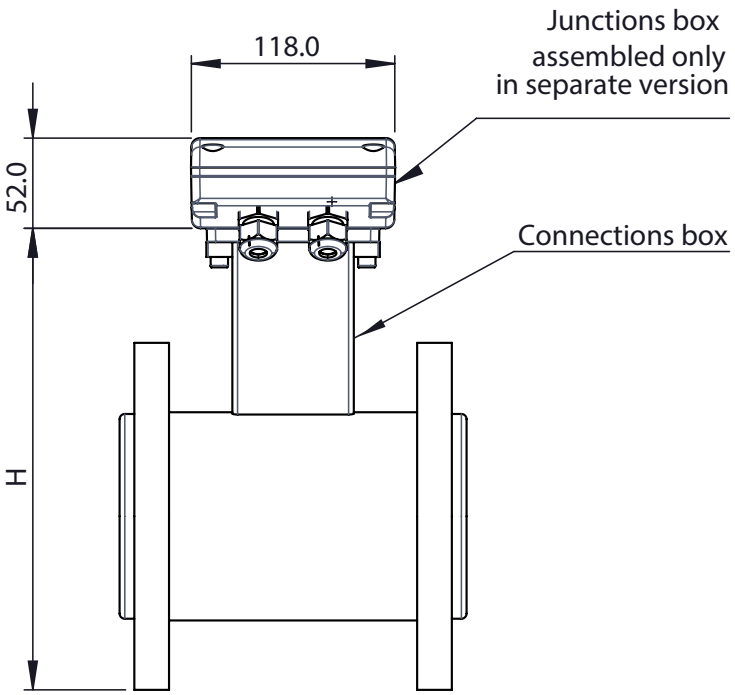

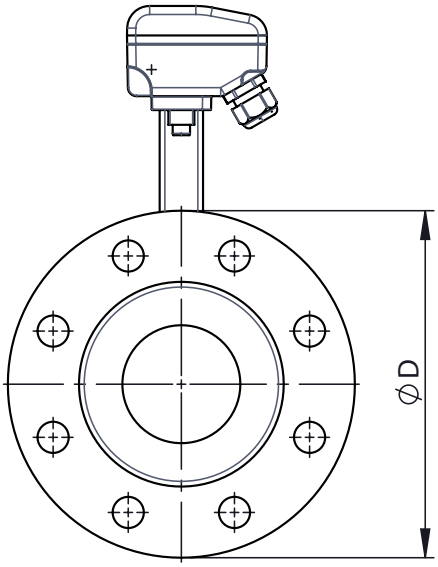

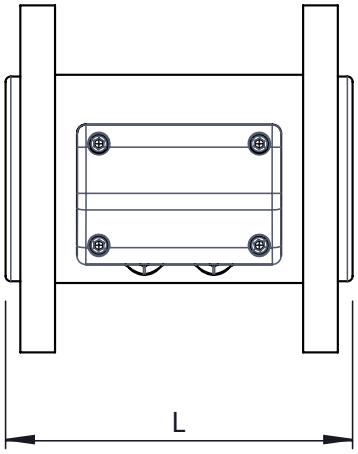

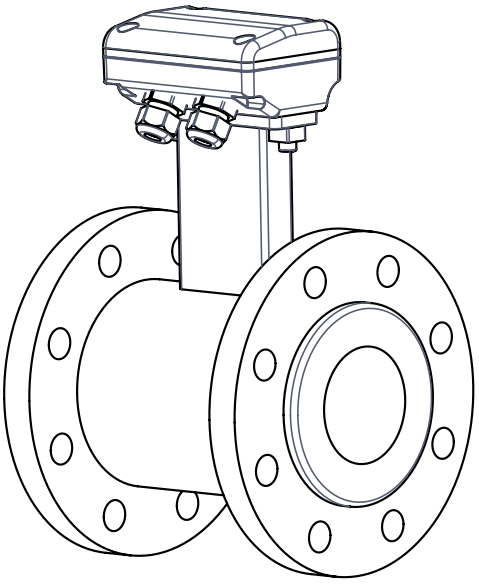

The manufacturer guarantees only English text available on our web site www.isoil.com

MS 2500 PN 10/64 - ANSI 150/300 OVERALL DIMENSIONS

DIMENSIONS mm (inches)			PN						
			PN 10	PN 16	PN 25	PN 40	PN 64	ANSI 150	ANSI 300
DN	25 (1")	**L**	**200 (7.87)**	**200 (7.87)**	**200 (7.87)**	**200 (7.87)**	**200 (7.87)**	**200 (7.87)**	**200 (7.87)**
		H	185 (7.28)	185 (7.28)	185 (7.28)	185 (7.28)	198 (7.80)	181 (7.13)	190 (7.48)
		D	**115 (4.53)**	**115 (4.53)**	**115 (4.53)**	**115 (4.53)**	**140 (5.51)**	**108 (4.25)**	**124 (4.88)**
	32 (1"1/4)	L	200 (7.87)	200 (7.87)	200 (7.87)	200 (7.87)	200 (7.87)	200 (7.87)	200 (7.87)
		H	**203 (8)**	**203 (8)**	**203 (8)**	**203 (8)**	**209 (8.23)**	**192 (7.56)**	**199 (7.83)**
		D	140 (5.51)	140 (5.51)	140 (5.51)	140 (5.51)	155 (6.10)	118 (4.65)	133 (5.24)
	40 (1"1/2)	**L**	**200 (7.87)**	**200 (7.87)**	**200 (7.87)**	**200 (7.87)**	**200 (7.87)**	**200 (7.87)**	**200 (7.87)**
		H	213 (8.39)	213 (8.39)	213 (8.39)	213 (8.39)	220 (8.66)	207 (8.15)	221 (8.7)
		D	**150 (5.90)**	**150 (5.90)**	**150 (5.90)**	**150 (5.90)**	**170 (6.69)**	**127 (5)**	**156 (6.14)**
	50 (2")	L	200 (7.87)	200 (7.87)	200 (7.87)	200 (7.87)	200 (7.87)	200 (7.87)	200 (7.87)
		H	**228 (8.98)**	**228 (8.98)**	**228 (8.98)**	**228 (8.98)**	**233 (9.17)**	**222 (8.74)**	**228 (8.98)**
		D	165 (6.50)	165 (6.50)	165 (6.50)	165 (6.50)	180 (7.09)	152 (5.98)	165 (6.5)
	65 (2"1/2)	**L**	**200 (7.87)**	**200 (7.87)**	**200 (7.87)**	**200 (7.87)**	**200 (7.87)**	**200 (7.87)**	**200 (7.87)**
		H	248 (9.76)	248 (9.76)	248 (9.76)	248 (9.76)	257 (10.12)	245 (9.65)	251 (9.88)
		D	**185 (7.28)**	**185 (7.28)**	**185 (7.28)**	**185 (7.28)**	**205 (8.07)**	**178 (7.01)**	**191 (7.52)**
	80 (3")	L	200 (7.87)	200 (7.87)	200 (7.87)	200 (7.87)	200 (7.87)	200 (7.87)	200 (7.87)
		H	**263 (10.35)**	**263 (10.35)**	**263 (10.35)**	**263 (10.35)**	**267 (10.51)**	**259 (10.2)**	**268 (10.55)**
		D	200 (7.87)	200 (7.87)	200 (7.87)	200 (7.87)	215 (8.46)	191 (7.52)	210 (8.27)
	100 (4")	**L**	**250 (9.84)**	**250 (9.84)**	**250 (9.84)**	**250 (9.84)**	**250 (9.84)**	**250 (9.84)**	**250 (9.84)**
		H	283 (11.14)	283 (11.14)	294 (11.57)	294 (11.57)	297 (11.69)	288 (11.34)	300 (11.81)
		D	**220 (8.66)**	**220 (8.66)**	**235 (9.25)**	**235 (9.25)**	**250 (9.84)**	**229 (9.02)**	**254 (10)**
	125 (5")	L	250 (9.84)	250 (9.84)	250 (9.84)	250 (9.84)	250 (9.84)	250 (9.84)	250 (9.84)
		H	**313 (12.32)**	**313 (12.32)**	**325 (12.80)**	**325 (12.80)**	**330 (13)**	**315 (12.4)**	**328 (12.91)**
		D	250 (9.84)	250 (9.84)	270 (10.63)	270 (10.63)	295 (11.61)	254 (10)	279 (10.98)
	150 (6")	**L**	**300 (11.81)**	**300 (11.81)**	**300 (11.81)**	**300 (11.81)**	**300 (11.81)**	**300 (11.81)**	**300 (11.81)**
		H	344 (13.54)	344 (13.54)	355 (13.98)	355 (13.98)	377 (14.84)	341 (13.43)	360 (14.17)
		D	**285 (11.22)**	**285 (11.22)**	**300 (11.81)**	**300 (11.81)**	**345 (13.58)**	**279 (10.98)**	**318 (12.52)**
	200 (8")	**L**	350 (13.78)	350 (13.78)	350 (13.78)	350 (13.78)	350 (13.78)	350 (13.78)	350 (13.78)
		H	**399 (15.71)**	**399 (15.71)**	**415 (16.34)**	**425 (16.73)**	**435 (17.13)**	**401 (15.79)**	**420 (16.54)**
		D	340 (13.39)	340 (13.39)	360 (14.17)	375 (14.76)	415 (16.34)	343 (13.5)	381 (15)
	250 (10)	**L**	**450 (17.72)**	**450 (17.72)**	**450 (17.72)**	**450 (17.72)**	**450 (17.72)**	**450 (17.72)**	**450 (17.72)**
		H	454 (17.87)	460 (18.11)	475 (18.7)	493 (19.41)	491 (19.33)	461 (18.15)	480 (18.9)
		D	**395 (15.55)**	**405 (15.94)**	**425 (16.73)**	**450 (17.72)**	**470 (18.5)**	**406 (15.98)**	**445 (17.52)**
	300 (12")	**L**	500 (19.69)	500 (19.69)	500 (19.69)	500 (19.69)	500 (19.69)	500 (19.69)	500 (19.69)
		H	**504 (19.84)**	**515 (20.28)**	**535 (21.06)**	**558 (21.97)**	**545 (21.46)**	**527 (20.75)**	**546 (21.5)**
		D	445 (17.52)	460 (18.11)	485 (19.09)	515 (20.28)	530 (20.87)	483 (19.02)	521 (20.51)
	350 (14")	**L**	**550 (21.65)**	**550 (21.65)**	**550 (21.65)**	**550 (21.65)**	**550 (21.65)**	**550 (21.65)**	**550 (21.65)**
		H	564 (22.2)	575 (22.64)	598 (23.54)	619 (24.37)	603 (23.74)	582 (22.91)	607 (23.9)
		D	**505 (19.88)**	**520 (20.47)**	**555 (21.85)**	**580 (22.83)**	**600 (23.62)**	**533 (20.98)**	**584 (22.99)**
	400 (16")	**L**	600 (23.62)	600 (23.62)	600 (23.62)	600 (23.62)	600 (23.62)	600 (23.62)	600 (23.62)
		H	**620 (24.41)**	**630 (24.8)**	**659 (25.94)**	**695 (27.36)**	**670 (26.38)**	**639 (25.16)**	**664 (26.14)**
		D	565 (22.24)	580 (22.83)	62 (2.44)	660 (25.98)	670 (26.38)	597 (23.5)	648 (25.51)
	450 (18")	**L**	**600 (23.62)**	**600 (23.62)**	**600 (23.62)**	**600 (23.62)**		**600 (23.62)**	**600 (23.62)**
		H	670 (26.38)	690 (27.17)	709 (27.91)	720 (28.35)		688 (27.09)	726 (28.58)
		D	**615 (24.21)**	**640 (25.2)**	**670 (26.38)**	**685 (26.97)**		**635 (25)**	**711 (27.99)**
	500 (20")	**L**	600 (23.62)	600 (23.62)	600 (23.62)	600 (23.62)		600 (23.62)	600 (23.62)
		H	**725 (28.54)**	**758 (29.84)**	**769 (30.28)**	**784 (30.87)**		**751 (29.57)**	**770 (30.31)**
		D	670 (26.38)	715 (28.15)	730 (28.74)	755 (29.72)		699 (27.52)	775 (30.51)

The manufacturer guarantees only English text available on our web site www.isoil.com

DIMENSIONS mm (inches)			PN						
			PN 10	PN 16	PN 25	PN 40	PN 64	ANSI 150	ANSI 300
DN	600 (24″)	L	**600 (23.62)**	**600 (23.62)**	**600 (23.62)**	**600 (23.62)**		**600 (23.62)**	**600 (23.62)**
		H	830 (32.68)	879 (34.61)	880 (34.65)	911 (35.87)		866 (34.09)	916 (36.06)
		D	**780 (30.71)**	**840 (33.07)**	**845 (33.27)**	**890 (35.04)**		**813 (32.01)**	**914 (35.98)**
	650 (26″)	L						650 (25.59)	650 (25.59)
		H						**921 (36.26)**	**1002 (39.45)**
		D						870 (34.25)	972 (38.27)
	700 (28″)	L	**700 (27.56)**	**700 (27.56)**	**700 (27.56)**	**700 (27.56)**		700 (27.56)	
		H	925 (36.41)	949 (37.36)	989 (38.94)	1016 (40)		1016 (40)	
		D	**895 (35.24)**	**910 (35.83)**	**960 (37.8)**	**995 (39.17)**		**927,1 (36,5)**	
	750 (30″)	L						750 (29.53)	750 (29.53)
		H						**1032 (40.63)**	**1121 (44.13)**
		D						984 (38.74)	1092 (42.99)
	800 (32″)	L	**800 (31.5)**	**800 (31.5)**	**800 (31.5)**	**800 (31.5)**		**800 (31.5)**	
		H	1058 (41.65)	1060 (41.73)	1106 (43.54)	1149 (45.24)		1149 (45.24)	
		D	**1015 (39.96)**	**1025 (40.35)**	**1085 (42.72)**	**1114 (43.86)**		**1060,5 (47,15)**	
	850 (34″)	L						850 (33.46)	850 (33.46)
		H						**1149 (45.24)**	**1230 (48.43)**
		D						1111 (43.74)	1207 (47.52)
	900 (36″)	L	**900 (35.43)**	**900 (35.43)**	**900 (35.43)**	**900 (35.43)**		**900 (35.43)**	**900 (35.43)**
		H	1158 (45.59)	1160 (45.67)	1206 (47.48)	1259 (49.57)		1206 (47.48)	1292 (50.87)
		D	**1115 (43.9)**	**1125 (44.29)**	**1185 (46.65)**	**1250 (49.21)**		**1168 (45.98)**	**1270 (50)**
	1000 (40″)	L	1000 (39.37)	1000 (39.37)	1000 (39.37)	1000 (39.37)		1000 (39.37)	1000 (39.37)
		H	**1269 (49.96)**	**1284 (50.55)**	**1329 (52.32)**	**1369 (53.9)**		**1381 (54.37)**	**1467 (57.76)**
		D	1230 (48.43)	1255 (49.41)	1320 (51.97)	1360 (53.54)		1346 (52.99)	1448 (57.01)
	1050 (42″)	L						**1050 (41.3)**	
		H						1355.0 (54.00)	
		D						1346.2 (53.00)	
	1100 (44″)	L						**1100 (43.3)**	
		H						1428 (56.25)	
		D						1403.4 (55.25)	
	1200 (48″)	L						**1200 (47.24)**	
		H						1530 (60.50)	
		D						1511.3 (59.50)	
	1800 (72″)	L						**1800 (72.00)**	
		H						1381 (54.37)	
		D						2197 (86.50)	

The manufacturer guarantees only English text available on our web site www.isoil.com

	1	2	3	4
A PAINTED ALUMINIUM	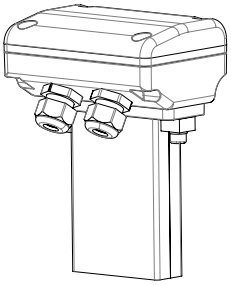	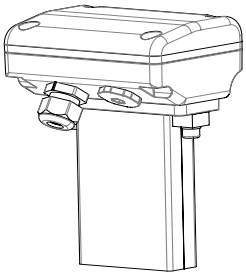	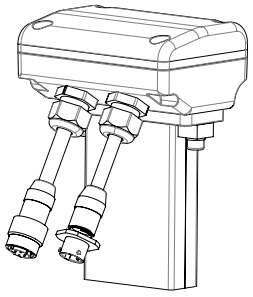	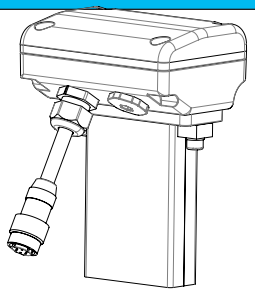
B AISI 304	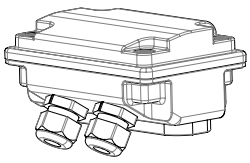	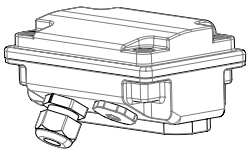	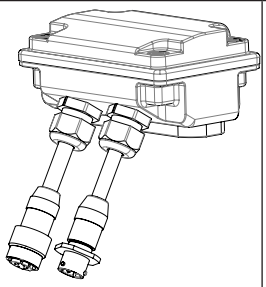	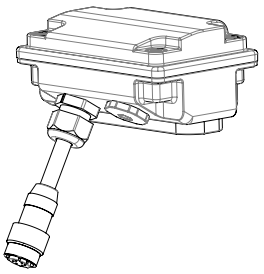

PRICE LIST OPTIONS	JUNCTION BOX TYPE (surface finish)
A	Without junction box, converter connected on the connections box
B	A-1 A-2 only for MV110
G	A-4
F	A-3
N	A-2 with preamplifier
Q	A-4 with preamplifier
U	B-1 (raw) B-2 only for ML110 (raw)
S	B-4 (raw)
T	B-3 (raw)
P	B-2 with preamplifier (raw)
R	B-4 with preamplifier (raw)
K	B-1 (polished) B-2 only for ML110 (polished)
Y	B-4 (polished)
W	B-3 (polished)
V	B-2 with preamplifier (polished)
J	B-4 with preamplifier (polished)

The manufacturer guarantees only English text available on our web site www.isoil.com

SEPARATE VERSION

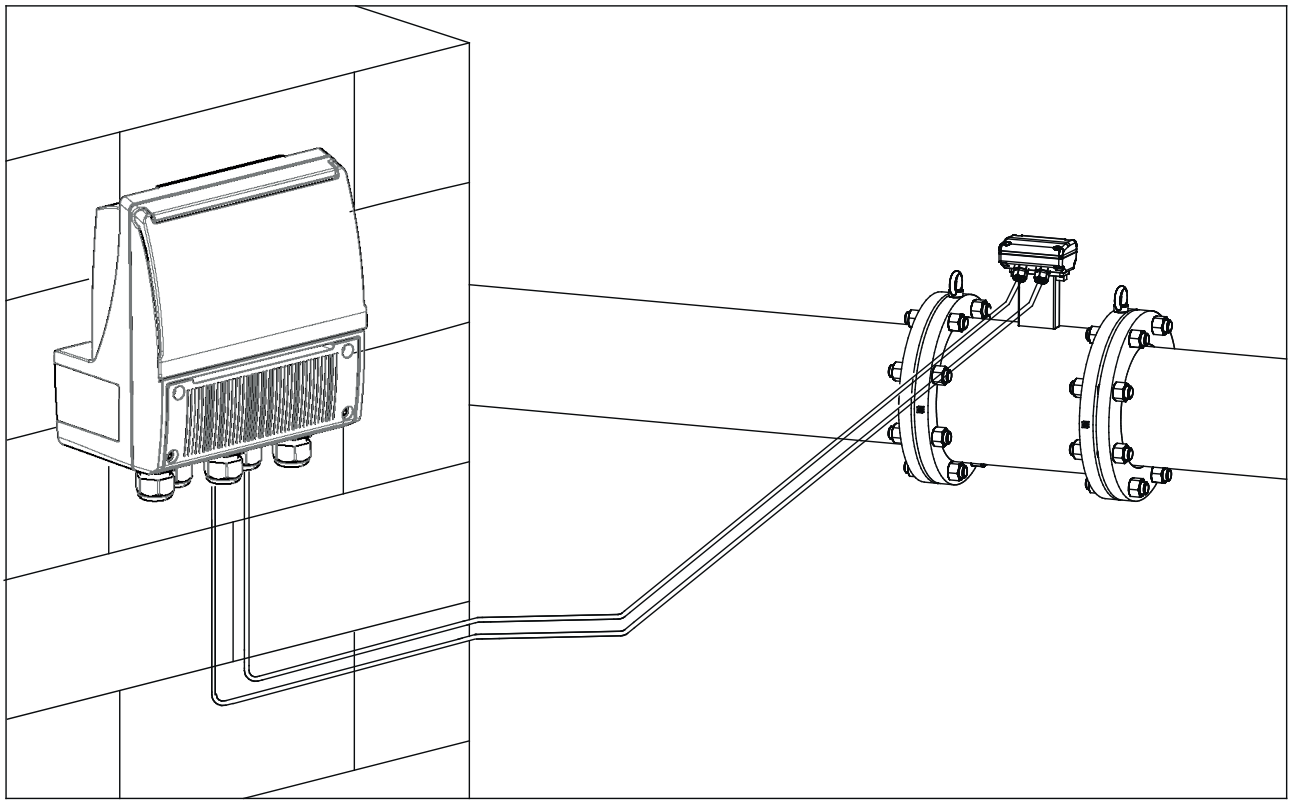

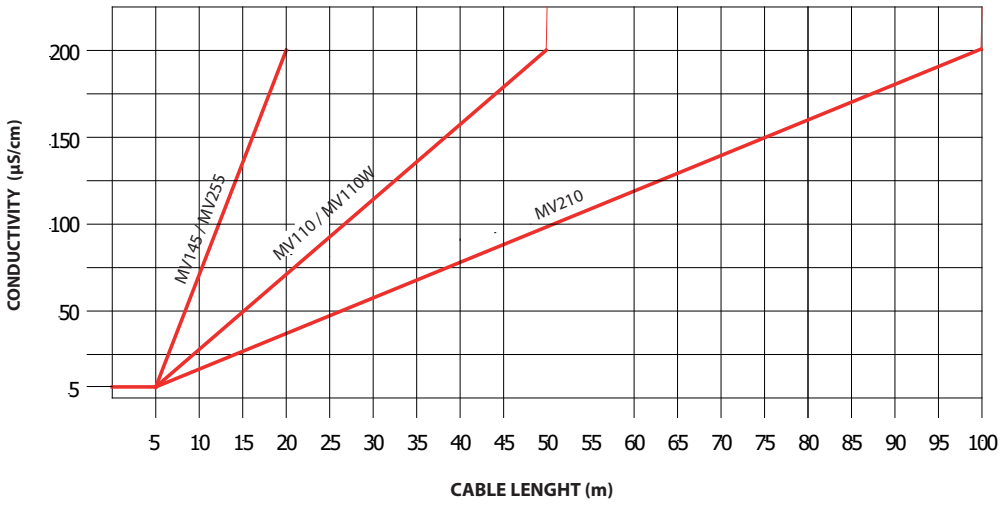

Notes:

- It is recommended to install the connection cables away from, or protect against sources of electromagnetic noise.
- The minimum conductivity of the liquid medium to ensure correct functionality of the empty pipe detection is 20 µS/cm

The manufacturer guarantees only English text available on our web site www.isoil.com

INSTALLATION RECOMMENDATIONS

In vertical installations an ascending flow is preferable. For vertical installations with descending flowdirection contact the manufacturer

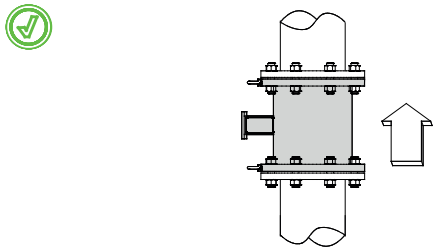

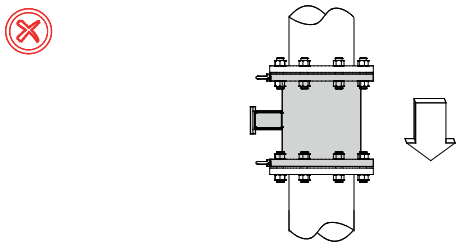

For installations in long pipe lines, please use anti vibration joints

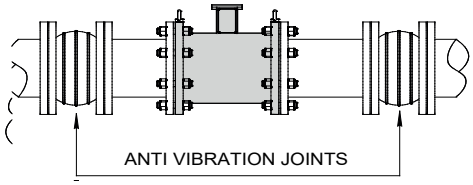

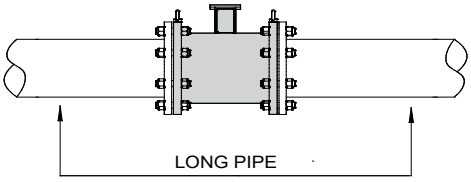

Avoid a partially empty pipe, during operation the pipe must be either completely full of liquid or completely empty

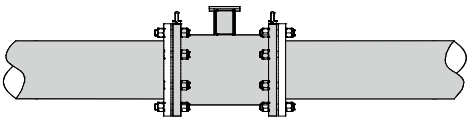

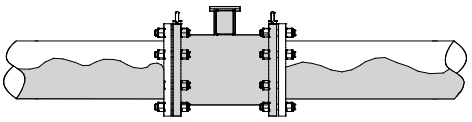

Install the sensor away from bends and hydraulic accessories

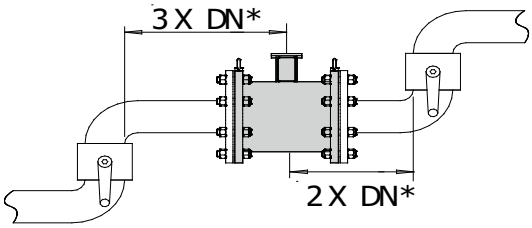

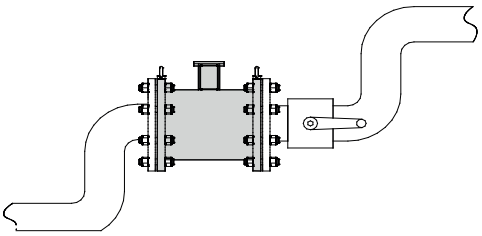

Avoid positioning flanges by tigthening the nuts

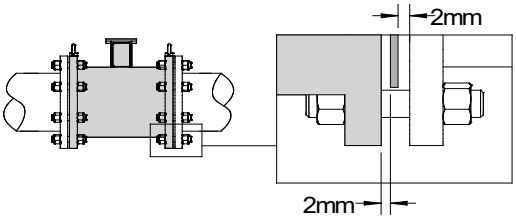

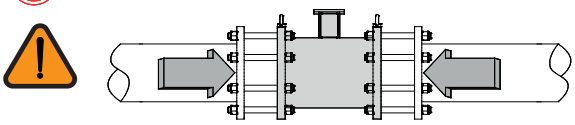

(*) Flow profile sensitivity class: U0D0 according to ISO 4064 - OIMLR49 - MID

The manufacturer guarantees only English text available on our web site www.isoil.com

RECOMMENDED INSTALLATION PROCEDURE

Sensors weighing more than 20Kg are equipped of appropriate eyebolts to lift the sensor according to the drawing above.

The eyebolts support ONLY the weight of the meter.

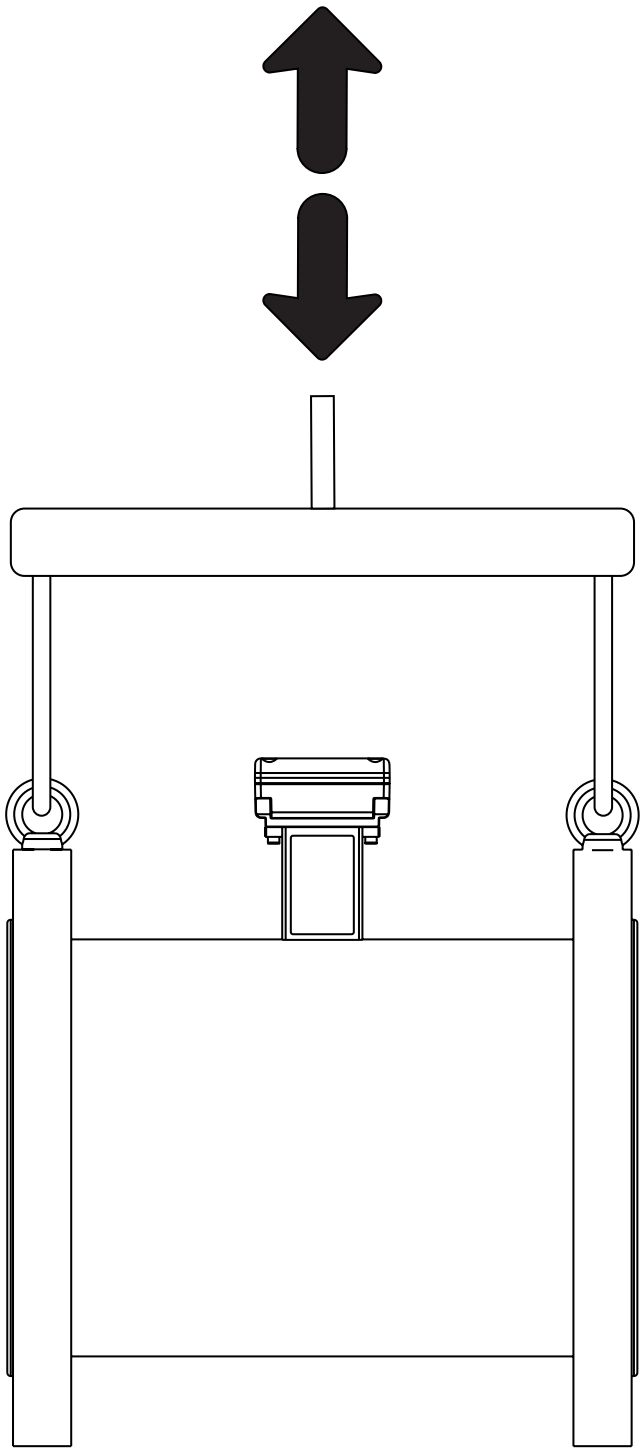

The manufacturer guarantees only English text available on our web site www.isoil.com

SENSOR GROUNDING

METALLIC PIPE

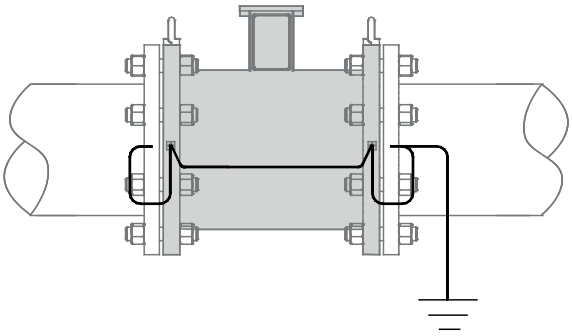

INSULATED PIPE

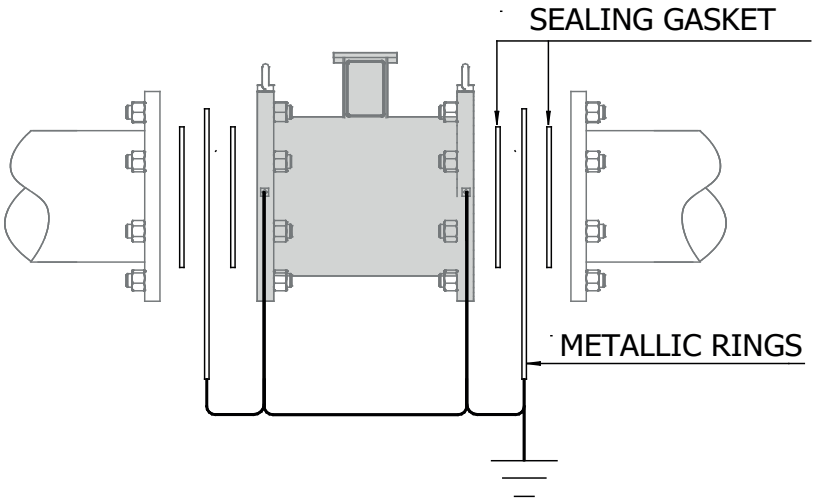

If the sensor has to be installed in a pipe made of an insulating material, thefollowing are necessary:
- Inserting two metallic rings between the sensor flanges and the pipe line counter flanges

PIPE WITH CATHODIC PROTECTION

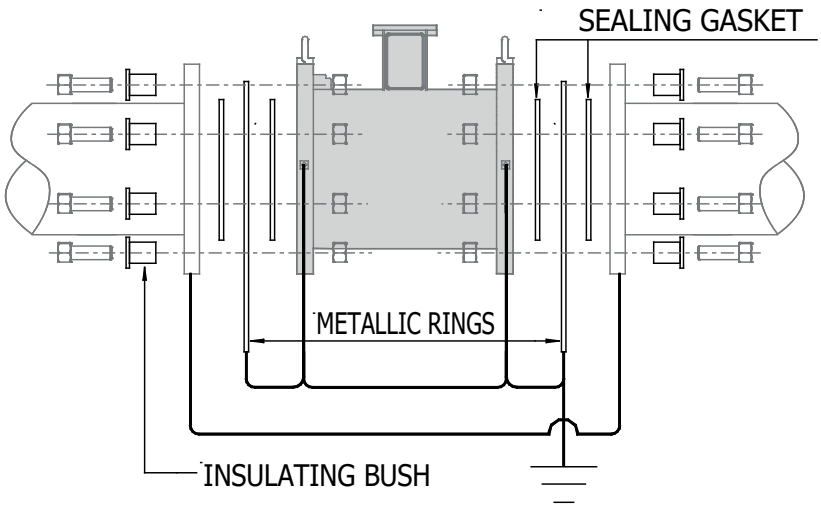

If the sensor has to beinstalled in the pipe with a cathodic protection,the following are necessary:

using insulating bushesto isolate the bolts

Metallic grounding rings should be provided to ground the liquid using insulating gasket between the rings

The manufacturer guarantees only English text available on our web site www.isoil.com

PRESSURE LOSS CALCULATION (CONES 8° ANGLES)

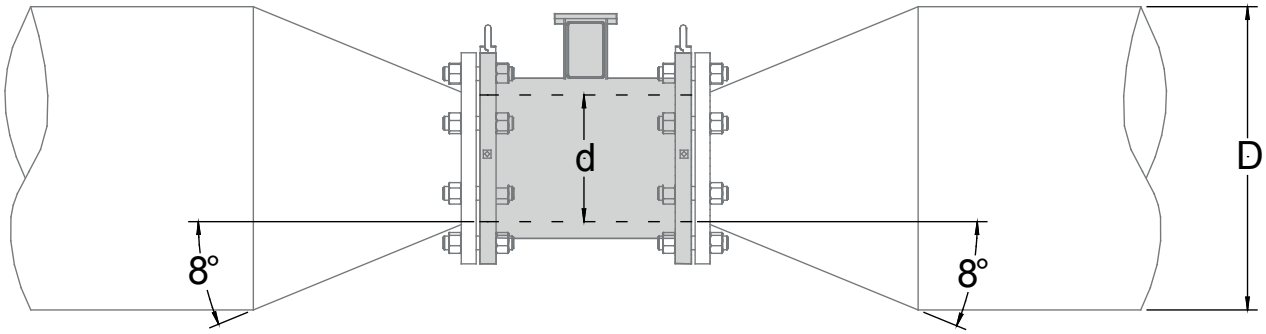

$$\Delta p = \left[0.10 + 0.20 \left(\left(\frac{d}{D} \right)^{-2} - 1 \right)^{2} \left(\frac{d}{D} \right)^{4} \right] \left(\rho \frac{u^2}{2} \right)$$

Were:

Δp = Pressure loss in [Pa]
ρ = Fluid density [kg/m³] typical value ρ = 1000 [kg/m³]
d = sensor diameter [m]
D = pipe diameter (greater than sensor diameter) [m]
u = Mean flow velocity in sensor diameter [m/s]

Calculation examples Δp [mbar]								
u / d/D	1 [m/s]	2 [m/s]	3 [m/s]	4 [m/s]	5 [m/s]	6 [m/s]	7 [m/s]	8 [m/s]
0.5	1.1	4.3	9.6	17	26.6	38.3	52.1	68
0.6	0.9	3.6	8.2	14.6	22.7	32.7	44.6	58.2
0.7	0.8	3	6.8	12.2	19	27.4	37.2	48.6
0.8	0.6	2.5	5.7	10.1	15.7	22.7	30.9	40.3
0.9	0.5	2.1	4.8	8.6	13.4	19.3	26.3	34.3

Notes:

- ρ = 1000 [kg/m³] as goodness approximation of water density in common use
- Inner diameter of sensor is used for d, express in meters.
- Indeed pressure loss equation is dimensionally correct in [Pa]. The equation results in table are show in [mbar].

The manufacturer guarantees only English text available on our web site www.isoil.com

OIML R49: MV110/ MV110W/ MV145

The sensor **MS2500** diameters below, coupled with **MV110/MV110W/MV145** are certified in accordance with OIML R49:2013

CLASS 1

SIZE		Q3	Q2	Q1	R
mm	inch	m3/h			Q3/Q1
25	1	16	0.10	0.064	250
32	1 ¼	25	0.16	0.10	
40	1 ½	40	0.26	0.16	
50	2	63	0.40	0.25	
65	2 ½	100	0.64	0.40	
80	3	160	1.0	0.64	
100	4	250	1.6	1.0	
125	5	400	2.6	1.6	
150	6	630	4.0	2.5	
200	8	1000	6.4	4.0	
250	10	1600	10	6.4	
300	12	2500	16	10	
350	14	2500	16	10	
400	16	4000	26	16	
450	18	4000	26	16	
500	20	6300	40	25	
600	24	10000	64	40	

SIZE		Q3	Q2	Q1	R
mm	inch	m3/h			Q3/Q1
25	1	16	0.26	0.16	100
32	1 ¼	25	0.4	0.25	
40	1 ½	40	0.64	0.4	
50	2	63	1.01	0.63	
65	2 ½	100	1.6	1	
80	3	160	2.6	1.6	
100	4	250	4	2.5	
125	5	400	6.4	4	
150	6	630	10.1	6.3	
200	8	1000	16	10	
250	10	1600	26	16	
300	12	2500	40	25	
350	14	2500	40	25	
400	16	4000	64	40	
450	18	4000	64	40	
500	20	6300	101	63	
600	24	10000	160	100	

SIZE		Q3	Q2	Q1	R
mm	inch	m3/h			Q3/Q1
25	1	16	0.32	0.2	80
32	1 ¼	25	0.5	0.31	
40	1 ½	40	0.8	0.5	
50	2	63	1.3	0.79	
65	2 ½	100	2	1.25	
80	3	160	3.2	2	
100	4	250	5	3.13	
125	5	400	8	5	
150	6	630	13	7.88	
200	8	1000	20	12.5	
250	10	1600	32	20	
300	12	2500	50	31.25	
350	14	2500	50	31.25	
400	16	4000	80	50	
450	18	4000	80	50	
500	20	6300	126	78.75	
600	24	10000	200	125	

The manufacturer guarantees only English text available on our web site www.isoil.com

CLASS 2

SIZE		Q3	Q2	Q1	R
mm	inch	m3/h			Q3/Q1
25	1	16	0.064	0.040	400
32	1 ¼	25	0.10	0.063	
40	1 ½	40	0.16	0.10	
50	2	63	0.25	0.16	
65	2 ½	100	0.40	0.25	
80	3	160	0.64	0.40	
100	4	250	1.0	0.63	
125	5	400	1.6	1.0	
150	6	630	2.5	1.6	
200	8	1000	4.0	2.5	
250	10	1600	6.4	4.0	
300	12	2500	10	6.3	
350	14	2500	10	6.3	
400	16	4000	16	10	
450	18	4000	16	10	
500	20	6300	25	16	
600	24	10000	40	25	
650	26	10000	40	25	
700	28	10000	64	40	250
750	30	10000	64	40	
800	32	16000	160	100	160
900	36	16000	160	100	
1000	42	16000	256	160	100
1200	48	16000	320	200	80
1400	56	16000	320	200	
1600	64	16000	320	200	
1800	72	16000	640	400	40
2000	80	16000	640	400	

SIZE		Q3	Q2	Q1	R
mm	inch	m3/h			Q3/Q1
25	1	16	0.10	0.064	250
32	1 ¼	25	0.16	0.10	
40	1 ½	40	0.26	0.16	
50	2	63	0.40	0.25	
65	2 ½	100	0.64	0.40	
80	3	160	1.0	0.64	
100	4	250	1.6	1.0	
125	5	400	2.6	1.6	
150	6	630	4.0	2.5	
200	8	1000	6.4	4.0	
250	10	1600	10	6.4	
300	12	2500	16	10	
350	14	2500	16	10	
400	16	4000	26	16	
450	18	4000	26	16	
500	20	6300	40	25	
600	24	10000	64	40	
650	26	10000	64	40	
700	28	10000	64	40	
750	30	10000	64	40	
800	32	16000	160	100	160
900	36	16000	160	100	
1000	42	16000	256	160	100
1200	48	16000	320	200	80
1400	56	16000	320	200	
1600	64	16000	320	200	
1800	72	16000	640	400	40
2000	80	16000	640	400	

The manufacturer guarantees only English text available on our web site www.isoil.com

CLASS 2

SIZE		Q3	Q2	Q1	R
mm	inch	m3/h			Q3/Q1
25	1	16	0.16	0.10	160
32	1 ¼	25	0.25	0.16	
40	1 ½	40	0.40	0.25	
50	2	63	0.63	0.40	
65	2 ½	100	1.0	0.63	
80	3	160	1.6	1.0	
100	4	250	2.5	1.6	
125	5	400	4.0	2.5	
150	6	630	6.3	4.0	
200	8	1000	10	6.3	
250	10	1600	16	10	
300	12	2500	25	16	
350	14	2500	25	16	
400	16	4000	40	25	
450	18	4000	40	25	
500	20	6300	63	40	
600	24	10000	100	63	
650	26	10000	100	63	
700	28	10000	100	63	
750	30	10000	160	100	
800	32	16000	160	100	
900	36	16000	160	100	
1000	42	16000	250	160	100
1200	48	16000	320	200	80
1400	56	16000	320	200	
1600	64	16000	320	200	
1800	72	16000	640	400	40
2000	80	16000	640	400	

The manufacturer guarantees only English text available on our web site www.isoil.com

MI-001: MV110 / MV110W/ MV145/ MV255

The sensor **MS2500** diameters below, coupled with **MV110/MV110W/MV145/MV255** are certified in accordance with European directive 2014/32/EU category MI-001

SIZE		Q3	Q2	Q1	R
mm	inch	m3/h			Q3/Q1
25	1	16	0.064	0.040	400
32	1 ¼	25	0.10	0.063	
40	1 ½	40	0.16	0.10	
50	2	63	0.25	0.16	
65	2 ½	100	0.40	0.25	
80	3	160	0.64	0.40	
100	4	250	1.0	0.63	
125	5	400	1.6	1.0	
150	6	630	2.5	1.6	
200	8	1000	4.0	2.5	
250	10	1600	6.4	4.0	
300	12	2500	10	6.3	
350	14	2500	10	6.3	
400	16	4000	16	10	
450	18	4000	16	10	
500	20	6300	25	16	
600	24	10000	40	25	
650	26	10000	40	25	
700	28	10000	64	40	250
750	30	10000	64	40	
800	32	16000	160	100	160
900	36	16000	160	100	
1000	42	16000	256	160	100
1200	48	16000	320	200	80
1400	56	16000	320	200	
1600	64	16000	320	200	
1800	72	16000	640	400	40
2000	80	16000	640	400	

SIZE		Q3	Q2	Q1	R
mm	inch	m3/h			Q3/Q1
25	1	16	0.10	0.064	250
32	1 ¼	25	0.16	0.10	
40	1 ½	40	0.26	0.16	
50	2	63	0.40	0.25	
65	2 ½	100	0.64	0.40	
80	3	160	1.0	0.64	
100	4	250	1.6	1.0	
125	5	400	2.6	1.6	
150	6	630	4.0	2.5	
200	8	1000	6.4	4.0	
250	10	1600	10	6.4	
300	12	2500	16	10	
350	14	2500	16	10	
400	16	4000	26	16	
450	18	4000	26	16	
500	20	6300	40	25	
600	24	10000	64	40	
650	26	10000	64	40	
700	28	10000	64	40	
750	30	10000	64	40	
800	32	16000	160	100	160
900	36	16000	160	100	
1000	42	16000	256	160	100
1200	48	16000	320	200	80
1400	56	16000	320	200	
1600	64	16000	320	200	
1800	72	16000	640	400	40
2000	80	16000	640	400	

The manufacturer guarantees only English text available on our web site www.isoil.com

The sensor **MS2500** diameters below, coupled with **MV110/MV110W/MV145/MV255** are certified in accordance with European directive 2014/32/EU category MI-001

SIZE		Q3	Q2	Q1	R
mm	inch	m3/h			Q3/Q1
25	1	16	0.16	0.10	
32	1 ¼	25	0.25	0.16	
40	1 ½	40	0.40	0.25	
50	2	63	0.63	0.40	
65	2 ½	100	1.0	0.63	
80	3	160	1.6	1.0	
100	4	250	2.5	1.6	
125	5	400	4.0	2.5	
150	6	630	6.3	4.0	
200	8	1000	10	6.3	
250	10	1600	16	10	
300	12	2500	25	16	**160**
350	14	2500	25	16	
400	16	4000	40	25	
450	18	4000	40	25	
500	20	6300	63	40	
600	24	10000	100	63	
650	26	10000	100	63	
700	28	10000	100	63	
750	30	10000	160	100	
800	32	16000	160	100	
900	36	16000	160	100	
1000	42	16000	250	160	**100**
1200	48	16000	320	200	
1400	56	16000	320	200	**80**
1600	64	16000	320	200	
1800	72	16000	640	400	**40**
2000	80	16000	640	400	

The manufacturer guarantees only English text available on our web site www.isoil.com

MI-001: MV800

The sensor **MS2500** diameters below, coupled with **MV800** are certified in accordance with European directive 2014/32/EU category MI-001

SIZE		Q3	Q2	Q1	R
mm	inch	m3/h			Q3/Q1
25	1	16	0.16	0.10	160
32	1 ¼	25	0.25	0.16	
40	1 ½	40	0.40	0.25	
50	2	63	0.63	0.39	
65	2 ½	100	1.0	0.63	
80	3	160	1.6	1.0	
100	4	250	2.5	1.6	
125	5	400	4.0	2.5	
150	6	630	6.3	3.9	
200	8	630	6.3	3.9	
250	10	630	6.3	3.9	

SIZE		Q3	Q2	Q1	R
mm	inch	m3/h			Q3/Q1
25	1	16	0.06	0.04	400
32	1 ¼	25	0.10	0.063	
40	1 ½	40	0.16	0.10	
50	2	63	0.25	0.16	
65	2 ½	100	0.40	0.25	
80	3	160	0.64	0.40	
100	4	250	1.0	0.63	
125	5	400	1.6	1.0	
150	6	630	2.5	1.6	

The manufacturer guarantees only English text available on our web site www.isoil.com

OIML R49 ACCURACY CLASS 1

(OIML R 49-1:2013 (E) - ISO4064:2014)

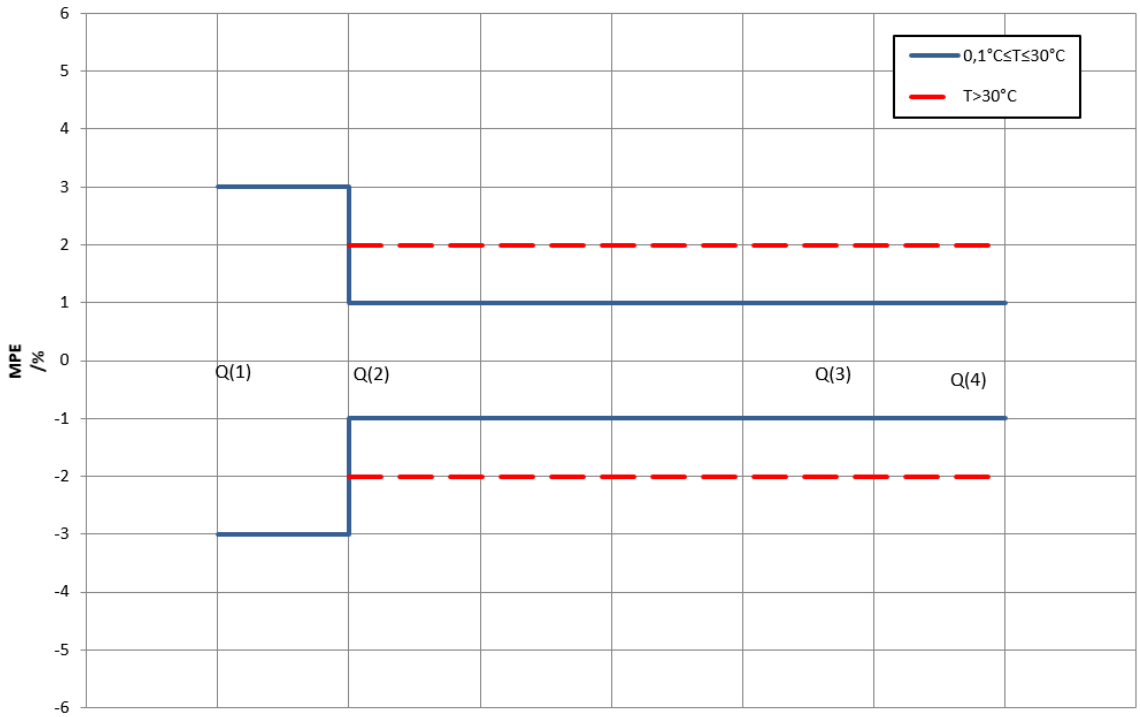

MPE - MI 001 - OIML R49 ACCURACY CLASS 2

(OIML R 49-1:2013 (E) - ISO4064:2014)

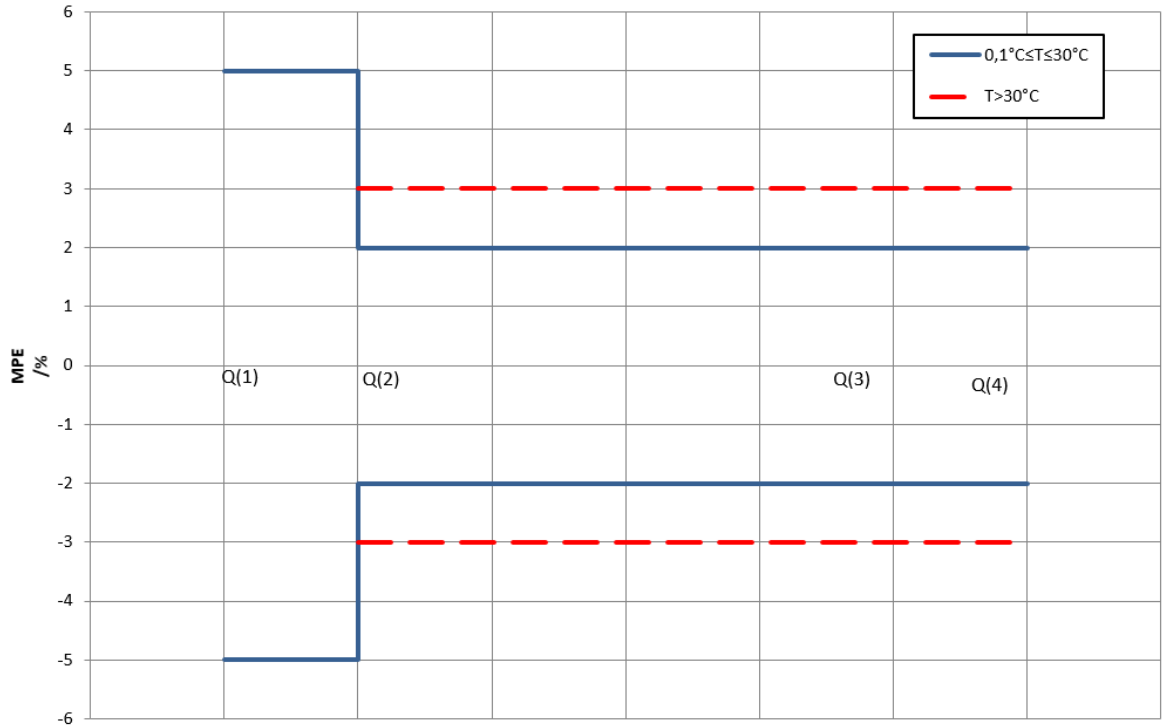

The manufacturer guarantees only English text available on our web site www.isoil.com

MI-004: MV110 / MV110W / MV800

The MS2500 sensor's diameters listed below, coupled with MV110 / MV110W / MV800, are certified according to European Directive 2014/32/EU category MI-004

SIZE		q_p	q_s	0,1 q_p	q_i	MC
mm	inch	m3/h				q_p/q_i
25	1	16	16	1,6	0,16	100
32	1 ¼	25	25	2,5	0,25	
40	1 ½	40	40	4	0,40	
50	2	63	63	6,3	0,63	
65	2 ½	100	100	10	1,00	
80	3	160	160	16	1,60	
100	4	250	250	25	2,50	
125	5	400	400	40	4,0	
150	6	630	630	63	6,3	
200	8	1000	1000	100	10	
250	10	1600*	1600	160	20,00	80
300	12	2500*	2500	250	31,25	
350	14	2500*	2500	250	31,25	
400	16	4000*	4000	400	50,00	

SIZE		q_p	q_s	0,1 q_p	q_i	MC
mm	inch	m3/h				q_p/q_i
25	1	10	16	1	0,2	50
32	1 ¼	16	25	1,6	0,32	
40	1 ½	25	40	2,5	0,5	
50	2	40	63	4	0,8	
65	2 ½	63	100	6,3	1,26	
80	3	100	160	10	2	
100	4	160	250	16	3,2	
125	5	250	400	25	5	
150	6	400	630	40	8	
200	8	630	1000	63	12,6	
250	10	1000	1600	100	20	
300	12	1600*	2500	160	32	
350	14	2500*	2500	250	50	
400	16	2500*	4000	250	50	

SIZE		q_p	q_s	0,1 q_p	q_i	MC
mm	inch	m3/h				q_p/q_i
25	1	10	16	1	0,4	25
32	1 ¼	16	25	1,6	0,64	
40	1 ½	25	40	2,5	1	
50	2	40	63	4	1,6	
65	2 ½	63	100	6,3	2,52	
80	3	100	160	10	4	
100	4	160	250	16	6,4	
125	5	250	400	25	10	
150	6	400	630	40	16	
200	8	630	1000	63	25,2	
250	10	1000	1600	100	40	
300	12	1600*	2500	160	64	
350	14	2500*	2500	250	100	
400	16	2500*	4000	250	100	

SIZE		q_p	q_s	0,1 q_p	q_i	MC
mm	inch	m3/h				q_p/q_i
25	1	10	16	1	1	10
32	1 ¼	16	25	1,6	1,6	
40	1 ½	25	40	2,5	2,5	
50	2	40	63	4	4	
65	2 ½	63	100	6,3	6,3	
80	3	100	160	10	10	
100	4	160	250	16	16	
125	5	250	400	25	25	
150	6	400	630	40	40	
200	8	630	1000	63	63	
250	10	1000	1600	100	100	
300	12	1600*	2500	160	160	
350	14	2500*	2500	250	250	
400	16	2500*	4000	250	250	

(*) : Reduced flowrates to the test rig limits

The manufacturer guarantees only English text available on our web site www.isoil.com

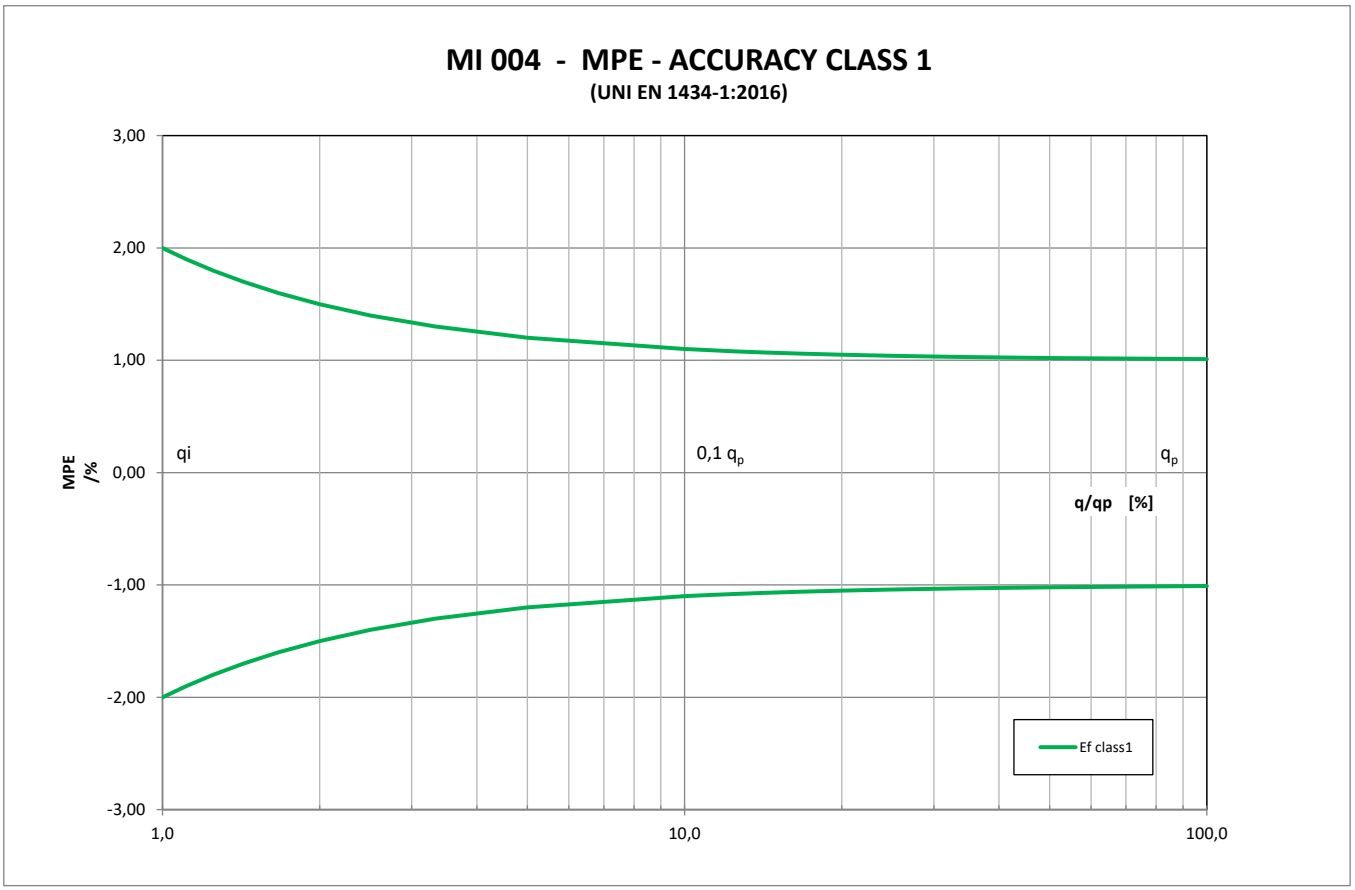

The manufacturer guarantees only English text available on our web site www.isoil.com

HOW TO ORDER

CODE/ EXAMPLE	CODE/DESCRIPTION	
	Nominal Diameter / Lining / Liquid temperature / Measuring range	
T100	P25	DN25 (1") , P.P. lining, liquid maximum temperature 60 °C measuring range 0...0,72/0...18 m3/h
	T25	DN25 (1") , PTFE lining, liquid maximum temperature 110 °C measuring range 0...0,72/0...18 m3/h
	T25HT	DN25 (1") , PFA lining, liquid maximum temperature 180 °C measuring range 0...0,72/0...18 m3/h
	P32	DN32 (1 1/4"), P.P. lining, liquid maximum temperature 60 °C measuring range 0...1,16/0...29 m3/h
	T32	DN32 (1 1/4"), PTFE lining, liquid maximum temperature 110 °C measuring range 0...1,16/0...29 m3/h
	T32HT	DN32 (1 1/4"), PFA lining, liquid maximum temperature 180 °C measuring range 0...1,16/0...29 m3/h
	P40	DN40 (1 1/2"), P.P. lining, liquid maximum temperature 60 °C measuring range 0...1,8/0...45 m3/h
	T40	DN40 (1 1/2"), PTFE lining, liquid maximum temperature 110 °C measuring range 0...1,8/0...45 m3/h
	T40HT	DN40 (1 1/2"), PFA lining, liquid maximum temperature 180 °C measuring range 0...1,8/0...45 m3/h
	P50	DN50 (2"), P.P. lining, liquid maximum temperature 60 °C measuring range 0...2,88/0...72 m3/h
	T50	DN50 (2"), PTFE lining, liquid maximum temperature 110 °C measuring range 0...2,88/0...72 m3/h
	T50HT	DN50 (2"), PFA lining, liquid maximum temperature 180 °C measuring range 0...2,88/0...72 m3/h
	R50	DN50 (2"), RILSAN lining, liquid maximum temperature 70 °C measuring range 0...2,88/0...72 m3/h
	P65	DN65 (2 1/2"), P.P. lining, liquid maximum temperature 60 °C measuring range 0...4,8/0...120 m3/h
	T65	DN65 (2 1/2"), PTFE lining, liquid maximum temperature 110 °C measuring range 0...4,8/0...120 m3/h
	T65HT	DN65 (2 1/2"), PFA lining, liquid maximum temperature 180 °C measuring range 0...4,8/0...120 m3/h
	R65	DN65 (2 1/2"), RILSAN lining, liquid maximum temperature 70 °C measuring range 0...4,8/0...120 m3/h
	P80	DN80 (3"), P.P. lining, liquid maximum temperature 60 °C measuring range 0...7,2/0...180 m3/h
	T80	DN80 (3"), PTFE lining, liquid maximum temperature 110 °C measuring range 0...7,2/0...180 m3/h
	T80HT	DN80 (3"), PFA lining, liquid maximum temperature 180 °C measuring range 0...7,2/0...180 m3/h
	R80	DN80 (3"), RILSAN lining, liquid maximum temperature 70 °C measuring range 0...7,2/0...180 m3/h
	P100	DN100 (4"), P.P. lining, liquid maximum temperature 60 °C measuring range 0...11,2/0...280 m3/h
	T100	DN100 (4"), PTFE lining, liquid maximum temperature 110 °C measuring range 0...11,2/0...280 m3/h
	T100HT	DN100 (4"), PFA lining, liquid maximum temperature 180 °C measuring range 0...11,2/0...280 m3/h
	R100	DN100 (4"), RILSAN lining, liquid maximum temperature 70 °C measuring range 0...11,2/0...280 m3/h
	P125	DN125 (5"), P.P. lining, liquid maximum temperature 60 °C measuring range 0...18/0...450 m3/h
	T125	DN125 (5"), PTFE lining, liquid maximum temperature 110 °C measuring range 0...18/0...450 m3/h
	T125HT	DN125 (5"), PFA lining, liquid maximum temperature 180 °C measuring range 0...18/0...450 m3/h
	R125	DN125 (5"), RILSAN lining, liquid maximum temperature 70 °C measuring range 0...18/0...450 m3/h
	P150	DN150 (6"), P.P. lining, liquid maximum temperature 60 °C measuring range 0...25,6/0...640 m3/h
	T150	DN150 (6"), PTFE lining, liquid maximum temperature 110 °C measuring range 0...25,6/0...640 m3/h
	T150HT	DN150 (6"), PFA lining, liquid maximum temperature 180 °C measuring range 0...25,6/0...640 m3/h
	R150	DN150 (6"), RILSAN lining, liquid maximum temperature 70 °C measuring range 0...25,6/0...640 m3/h
	E200	DN200 (8"), Ebonite lining, liquid maximum temperature 80 °C measuring range 0...45,2/0...1130 m3/h
	T200	DN200 (8"), PTFE lining, liquid maximum temperature 110 °C measuring range 0...45,2/0...1130 m3/h
	T200HT	DN200 (8"), PFA lining, liquid maximum temperature 180 °C measuring range 0...45,2/0...1130 m3/h
	R200	DN200 (8"), RILSAN lining, liquid maximum temperature 70 °C measuring range 0...45,2/0...1130 m3/h
	E250	DN250 (10"), Ebonite lining, liquid maximum temperature 80 °C measuring range 0...70,8/0...1770 m3/h
	T250	DN250 (10"), PTFE lining, liquid maximum temperature 110 °C measuring range 0...70,8/0...1770 m3/h
	T250HT	DN250 (10"), PFA lining, liquid maximum temperature 180 °C measuring range 0...70,8/0...1770 m3/h
	R250	DN250 (10"), RILSAN lining, liquid maximum temperature 70 °C measuring range 0...70,8/0...1770 m3/h
	E300	DN300 (12"), Ebonite lining, liquid maximum temperature 80 °C measuring range 0...100,8/0...2520 m3/h

The manufacturer guarantees only English text available on our web site www.isoil.com

	T300	DN300 (12"), PTFE lining, liquid maximum temperature 110 °C measuring range 0...100,8/0...2520 m3/h
	T300HT	DN300 (12"), PFA lining, liquid maximum temperature 180 °C measuring range 0...100,8/0...2520 m3/h
	R300	DN300 (12"), RILSAN lining, liquid maximum temperature 70 °C measuring range 0...100,8/0...2520 m3/h
	E350	DN350 (14"), Ebonite lining, liquid maximum temperature 80 °C measuring range 0...138/0...3450 m3/h
	T350	DN350 (14"), PTFE lining, liquid maximum temperature 110 °C measuring range 0...138/0...3450 m3/h
	R350	DN350 (14"), RILSAN lining, liquid maximum temperature 70 °C measuring range 0...138/0...3450 m3/h
	E400	DN400 (16"), Ebonite lining, liquid maximum temperature 80 °C measuring range 0...180/0...4500 m3/h
	T400	DN400 (16"), PTFE lining, liquid maximum temperature 110 °C measuring range 0...180/0...4500 m3/h
	R400	DN400 (16"), RILSAN lining, liquid maximum temperature 70 °C measuring range 0...180/0...4500 m3/h
	E450	DN450 (18"), Ebonite lining, liquid maximum temperature 80 °C measuring range 0...228,8/0...5720 m3/h
	T450	DN450 (18"), PTFE lining, liquid maximum temperature 110 °C measuring range 0...228,8/0...5720 m3/h
	E500	DN500 (20"), Ebonite lining, liquid maximum temperature 80 °C measuring range 0...284/0...7100 m3/h
	T500	DN500 (20"), PTFE lining, liquid maximum temperature 110 °C measuring range 0...284/0...7100 m3/h
	E550	(22"), Ebonite lining, liquid maximum temperature 80 °C measuring range 0...348/0...8712m3/h
	E600	DN600 (24"), Ebonite lining, liquid maximum temperature 80 °C measuring range 0...408/0...10200 m3/h
	T600	DN600 (24"), PTFE lining, liquid maximum temperature 110 °C measuring range 0...408/0...10200 m3/h
	E650	(26"), Ebonite lining, liquid maximum temperature 80 °C measuring range 0...480/0...12000 m3/h
	T650	(26"), PTFE lining, liquid maximum temperature 110 °C measuring range 0...480/0...12000 m3/h
	E700	DN700, Ebonite lining, liquid maximum temperature 80 °C measuring range 0...560/0...14000 m3/h
	T700	DN700, PTFE lining, liquid maximum temperature 110 °C measuring range 0...560/0...14000 m3/h
	E750	(30"), rEbonite lining, liquid maximum temperature 80 °C measuring range 0...640/0...16000 m3/h
	T750	(30"), PTFE lining, liquid maximum temperature 110 °C measuring range 0...640/0...16000 m3/h
	E800	DN800, Ebonite lining, liquid maximum temperature 80 °C measuring range 0...720/0...18000 m3/h
	T800	DN800, PTFE lining, liquid maximum temperature 110 °C measuring range 0...720/0...18000 m3/h
	E850	(34"), Ebonite lining, liquid maximum temperature 80 °C measuring range 0...820/0...20500 m3/h
	T850	(34"), PTFE lining, liquid maximum temperature 110 °C measuring range 0...820/0...20500 m3/h
	E900	DN900 (36"), Ebonite lining, liquid maximum temperature 80 °C measuring range 0...920/0...23000 m3/h
	T900	DN900 (36"), PTFE lining, liquid maximum temperature 110 °C measuring range 0...920/0...23000 m3/h
	E1000	DN1000 (40"), Ebonite lining, liquid maximum temperature 80 °C measuring range 0...1140/0...28500 m3/h
	T1000	DN1000 (40"), PTFE lining, liquid maximum temperature 110 °C measuring range 0...1140/0...28500 m3/h
	E1050	DN1050 (42"), Ebonite lining, liquid maximum temperature 80 °C measuring range 0...1270/0...31752 m3/h
	E1200	DN1200 Ebonite lining, liquid maximum temperature 80 °C measuring range -1.600 - 40.000 m3/h
	E1400	DN 1400 Ebonite lining, liquid maximum temperature 80 °C measuring range - 2.200 - 55.000 m3/h
	E1600	DN 1600 Ebonite lining, liquid maximum temperature 80 °C measuring range - 2.880 - 72.000 m3/h
	E1800	DN1800 Ebonite lining, liquid maximum temperature 80 °C measuring range - 3.640 - 91.000 m3/h
	E2000	DN2000 Ebonite lining, liquid maximum temperature 80 °C measuring range - 4.608 - 115.200 m3 / h
	E2200	DN2200 Ebonite lining, liquid maximum temperature 80 °C measuring range - 5.575 - 139.392 m3 / h
	E2400	DN2400 Ebonite lining, liquid maximum temperature 80 °C measuring range - 6.635 - 165.888 m3 / h
Gasket material (internal tightness - only PP lining)		
A	A	No O-Ring (ONLY FOR PTFE/EBANITE/RILSAN LINING)
	B	O-Ring : FKM
	C	O-Ring : Edpm
	Z	O-Ring : to be specified
Flange type		
1	1	Flange EN1092 PN16 (standard with Polypropilene lining)
	2	Flange EN1092 PN10

The manufacturer guarantees only English text available on our web site www.isoil.com

	3	Flange EN1092 PN25
	4	Flange EN1092 PN40 (standard with PTFE liner up to DN50)
	5	Flange EN1092 PN64
	6	Flange ANSI 150RF
	7	Flange ANSI 300RF
	8	Flange EN1092 PN6
	9	Flange JIS 10K
	0	Flange: to be specified
Body and Flanges material		
A	A	Body and flange in Carbon Steel painted
	B	Body and flange in Stainless Steel (AISI304) (NOT AVAILABLE FOR LINING IN RILSAN)
	C	Body and flange in Stainless Steel (AISI316) (NOT AVAILABLE FOR LINING IN RILSAN)
	D	Body and flange in Carbon Steel painted according to UNI/EN/ISO 12944-2-C4
	E	Body and flange in Carbon Steel painted according to UNI/EN/ISO 12944-2-C5
	F	Body and flange in Carbon Steel painted CARBOZINC 11 - INORGANIC GALVANIZER
	Z	Body and flange material: other
Number and electrodes materia		
2	2	n. 3 (2 measure + 1 for ground) electrodes in AISI316L
	4	n. 3 (2 measure + 1 for ground) electrodes in Hastelloy C276
	5	n. 3 (2 measure + 1 for ground) electrodes in Titanium
	6	n. 3 (2 measure + 1 for ground) electrodes in Tantalum; not available with Polypropilene/Rilsan
	7	n. 3 (2 measure + 1 for ground) electrodes in Platinum; not available with Polypropilene/Rilsan (MAX DN = 50)
	0	Electrode material: to be specified
Version / Sensor protection class		
A	A	Compact execution, IP67 protection rate
	B	Separate version - Material JB: Alluminium - IP68 - for Cable C014 + C015/16
	F	Separate version - Material JB: Alluminium - IP68 - n.2 MIL connectors for Cable C015/016-CC/CS + CB
	N	Separate version - Material JB: Alluminium - IP67 - with Preamp for Cable C014 + C015/16
	L	Separate version - Material JB: Alluminium - IP68 - with Preamp - n.2 MIL connectors for Cable C015/016-CC/CS + CB
	U	Separate version - Material JB: 304 RAW - IP68 for Cable C014 + C015/16
	T	Separate version - Material JB: 304 RAW - IP68 - n.2 MIL connectors for Cable C015/016-CC/CS + CB
	P	Separate version - Material JB: 304 RAW - IP67 - with Preamp for Cable C014 + C015/16
	M	Separate version - Material JB: 304 RAW - IP68 - with Preamp - n.2 MIL connectors for Cable C015/016-CC/CS + CB
	K	Separate version - Material JB: 304 Polished - IP68 for Cable C014 + C015/16
	W	Separate version - Material JB: 304 Polished - IP68 - n.2 MIL connectors for Cable C015/016-CC/CS + CB
	V	Separate version - Material JB: 304 Polished - IP67 - with Preamp for Cable C014 + C015/16
	J	Separate version - Material JB: 304 Polished - IP68 - with Preamp - n.2 MIL connectors for Cable C015/016-CC/CS + CB

ATTENTION! The choice of preamplifier excludes the use of the Empty pipe e BIV functions

Complete code example for order → **MS2500 -T100-A1A2A**

The manufacturer guarantees only English text available on our web site www.isoil.com

ISOIL INDUSTRIA S.p.A.

HEAD OFFICE	SERVICE
Via Fratelli Gracchi, 27 20092 Cinisello Balsamo (MI) Tel +39 02 66027.1 sales@isoil.it	service@isoil.it

If you want to find the complete list of our distributors access at the following link:
http://www.isoil.it/en

Due to the constant technical development and improvement of its products, the manufacturer reserves the right to make changes and/or modify the information contained in this document without notice.

ISOIL INDUSTRIA
The solutions that count